NOTES:

1. TO INSPECT ASSEBMLY, FOLLOW FIRST ARTICLE AND IN PROCESS INSPECTION SHEET.
2. PUT THESE ITEMS IN SEPARATE PLASTIC BAGS.
3. TORQUE TO 8 +/-0.5 LB-FT.
4. APPLY THIN COAT OF SILICON GREASE FOR ALL O-RINGS BEFORE INSTALLATION.
5. APPLY LOCTITE 242, IF SCREW DOES NOT HAVE NYLON PATCH.
6. APPLY LOCTITE 680.
7. PULL OUT HOSE AND APPLY SILICON GREASE, BETWEEN HOUSE AND SPOUT, 10" FROM OUTLET TO HOSE.
8. TORQUE SWIVEL NUT TO 19 +/-2 LB-IN.
9. TORQUE TO 10 +/-2 LB-FT.
10. TORQUE TO 7 +/-2 LB-IN.
11. PARTIALLY THREAD MOUNTING KIT ONTO SHANK.
12. DO NOT DOCK SPRAY HEAD TO SPOUT WHEN PACKAGING.

BILL OF MATERIAL (CURRENT LEVEL)

ITEM	PT/ASSY	DESCRIPTION	TYPE	QTY.
1	3-743	PREP FAUCET BASE ASM	ASSEMBLY	1
2	13665	COLLAR	PART	1
3	12838	HANDLE HUB	PART	1
4	20-316	HANDLE LEVER ASM	ASSEMBLY	1
5	92035	SCRW, M4 X .7 X 10 PHL FLT HD SS	PART	1
6	20-190	CAP ASM	ASSEMBLY	1
7	3-417	SPRAY HEAD, JACOBEAN	ASSEMBLY	1
8	20-185	BASE RING ASM	ASSEMBLY	1

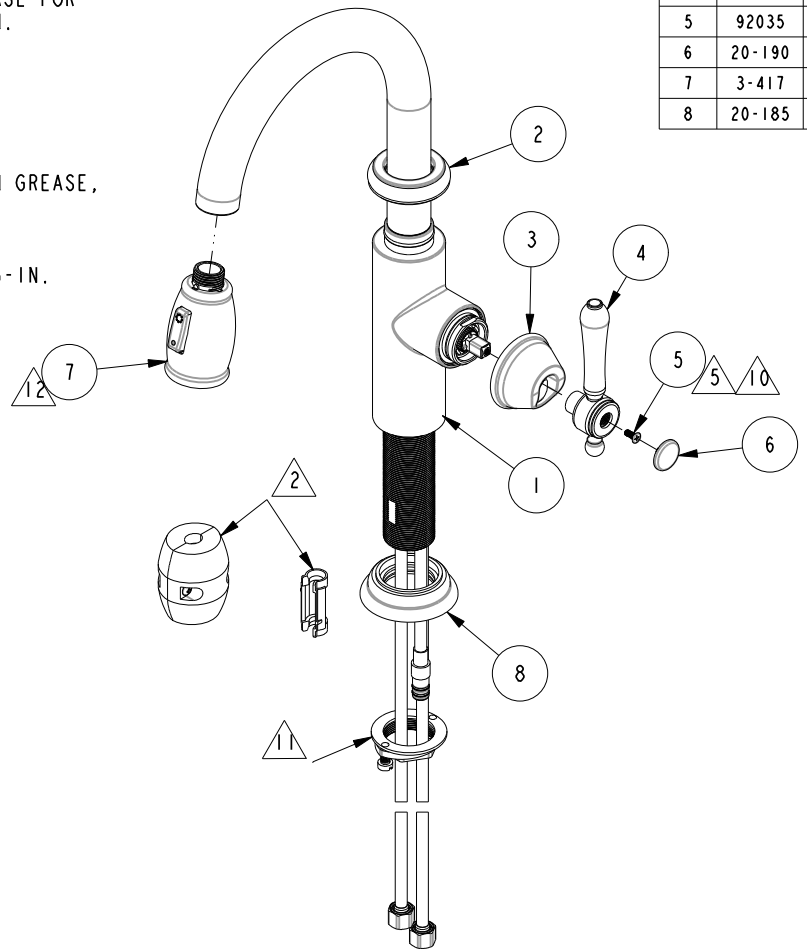

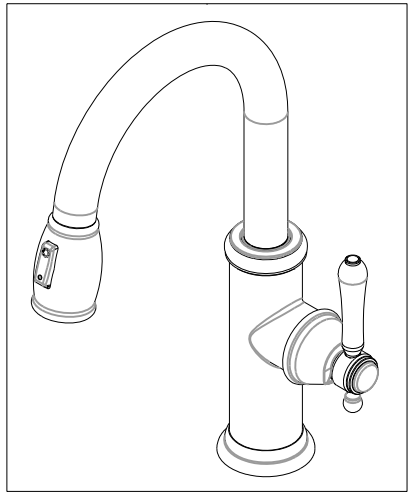

Cesar Gayosso Digitally signed by Cesar Gayosso Date: 2021.08.09 12:34:43 -07'00'

ZONE	REV	DESCRIPTION	DATE	APPROVED
-	J	EN-4213D	08/09/21	C.G.
-	H	EN-4300s	07/01/21	R.S.
-	G	EN-4118a	11/11/20	G.B.
-	F	EN-4167	06/08/20	JMR
-	E	EN-3931b	09/05/19	J.M.
-	D	EN-3413f	02/26/18	JM
-	C	EN-3413d	01/10/18	JM
-	B	EN-3034L	09/08/17	J.A
-	A	EN-3188	11/07/16	V.V.
-	-	EN-2980	09/30/16	V.V.

COPYRIGHT 2005 BRASSTECH, INC. THESE DRAWINGS AND THE DESIGNS DEPICTED HEREIN ARE THE PROPRIETARY PROPERTY OF BRASSTECH. ANY USE OR REPRODUCTION IS SUBJECT TO THE EXPRESS APPROVAL OF BRASSTECH. UNAUTHORIZED USE IS STRICTLY PROHIBITED. ALL RIGHTS RESERVED.

		-	-
TESTING	-	-	-
ASSEMBLY	-	-	-
PLATING	-	-	-
POLISHING	-	NEXT ASSY	USED ON
MACHINING	-	APPLICATION	
TOOLING FIXTURE #		REMOVE ALL BURRS AND SHARP EDGES	

UNITS ARE: INCHES [MM]
TOLERANCES ARE:
FRACTIONS ±1/16" DECIMALS .X ±.1 [2,5] .XX ±.06 [1,5] ANGLES ±1°
(X.XXX) DENOTES CRITICAL DIMS.
ALL THREADS ARE CRITICAL

DRAWN	JINSON	07/01/21
CHECKED	R.S.	07/01/21
APPROVED	R.S.	07/01/21

BRASSTECH INCORPORATED
2001 CARNEGIE AVE.
SANTA ANA, CA 92705
(949) 417-5207

PREP/BAR PULL DOWN FAUCET

DWG NO. 1030-5223 REV J

SCALE .200 REF. - SHEET 1 OF 2

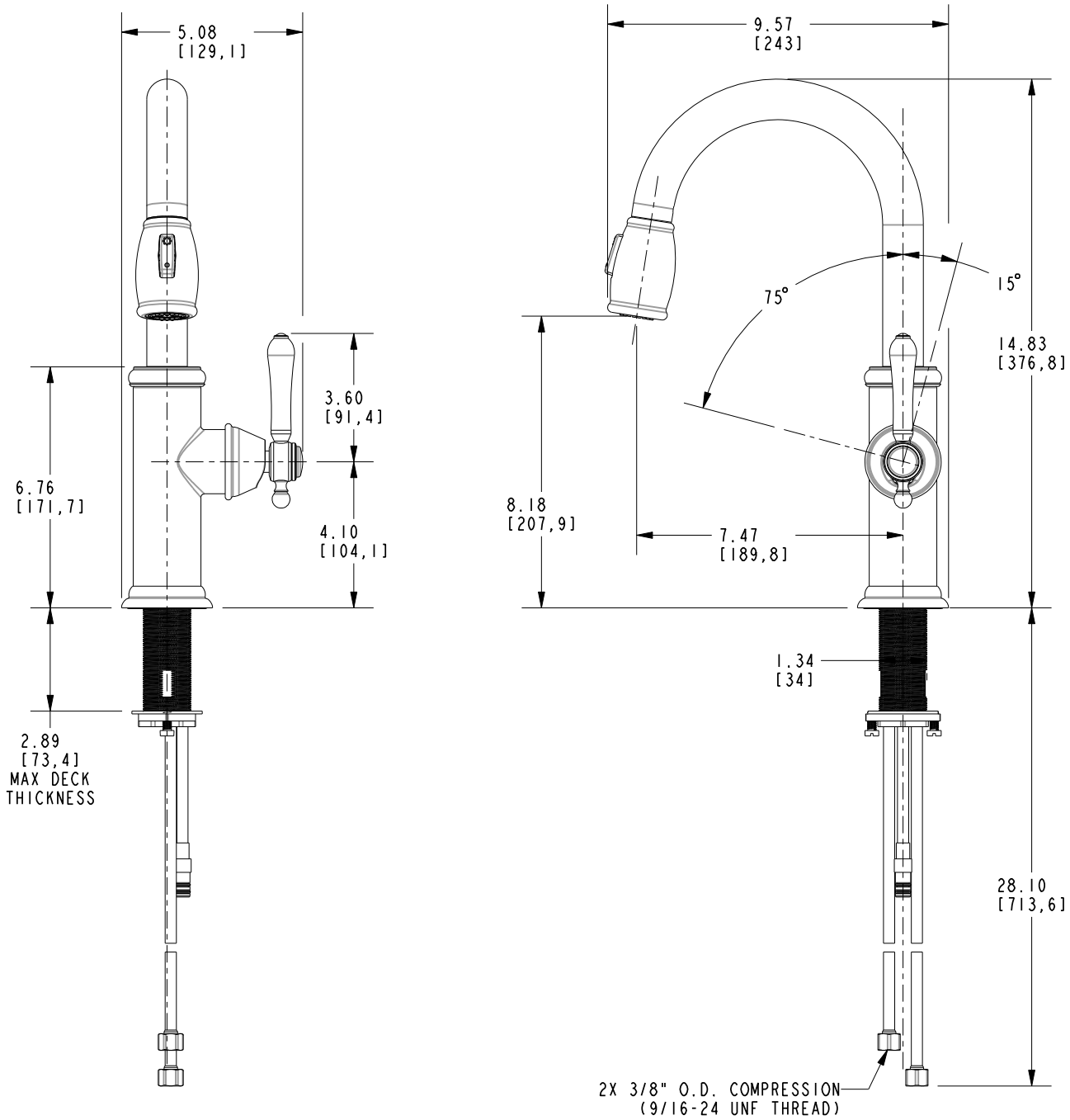

BRASSTECH INCORPORATED

2001 E. CARNEGIE AVE.
SANTA ANA, CA 92705
(949) 417-5207

DWG NO.	REV
1030-5223	J

SCALE	REF.	SHEET
.225	-	2 OF 2